Drum Motor

- Permanent magnet synchronous motor
- Motor efficiency Up to 95%
- No−load current is 10% of the rated current
- High starting torque
- Oil less design, no oil leak risk
- Zero maintenace, low running costs

Basic Technical Data

Voltage	3X380~415VAC 50Hz
Rated Power	2.55kW
Rated Current	4.9A
Length	800mm~1400mm
Operating Temperature	−10~+40℃
Ambient Humidity	10−90%RH (no moisture condensation)
Protection Rate	IP54

Performance Data

Product Ranges	DMR165	DMR216	Maximum Belt Tension
Speed Range:	30~60m/min		8000N
Rated Torque	174N · m	278N · m	
Belt Pull	2109N	2574N	
Belt Conveyor Length	≤9m	≤12m	
Belt Conveyor Carry Capacity	60kg/m		

Dimensions

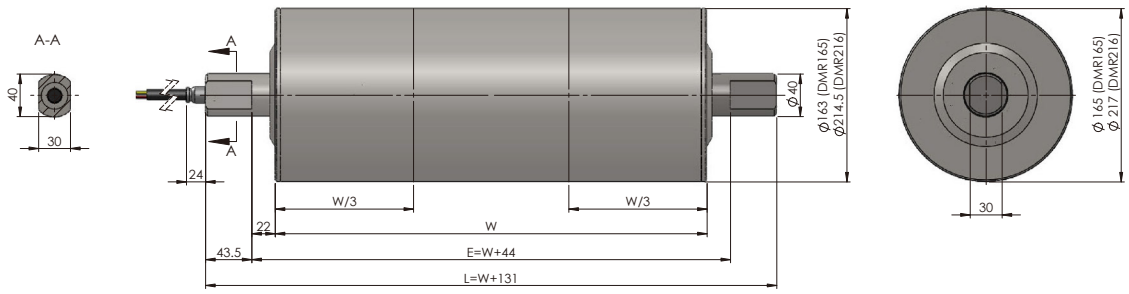

Wiring Connection Diagram

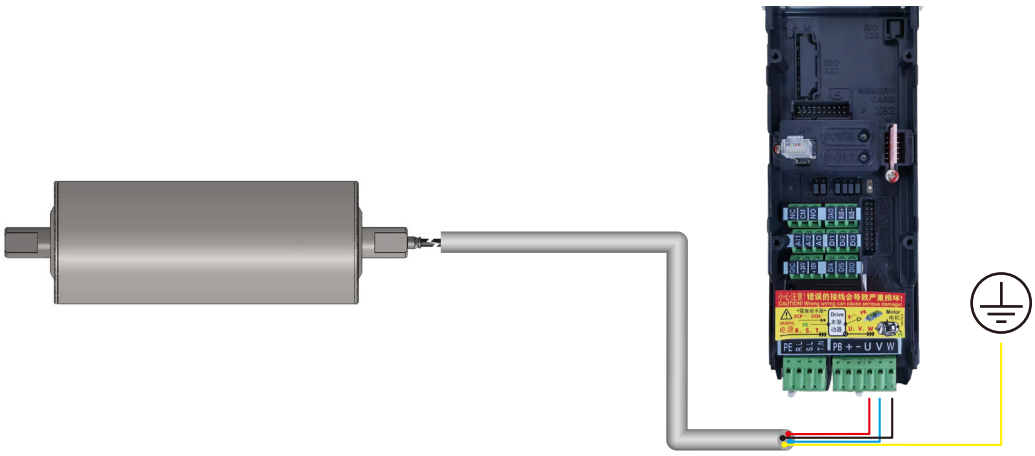

⚠ The Drum motor must be used in conjunction with a drive and should not be directly connected to a three-phase power supply. For more wiring details, please refer to the wiring instructions on the drive introduction page.

Model Example

DMR165 - A - SC - 25 60 - 1000 - SNS

① ② ③ ④ ⑤ ⑥ ⑦ ⑧ ⑨ ⑩ ⑪

①Basic Model: DMR

② Outer Diameter: 165: 165mm, 216: 216mm

③ Model Code: **A**: Standard Type

④ Type Of Motor: **S**： Permanent magnet synchronous motor

⑤ Voltage Level: **C**： 3X380VAC 50Hz

⑥ Power: **25**: 2.55kW

⑦ Maximum Speed: **60**： 60m/min

⑧ Length: Refer to the Dimensional Diagram (W)

⑨ Tube Material: **S**： Low carbon steel

⑩ Tube Surface: **N**： Standard：Z/P (Drum)

⑪ Cable Connector: **S**： M16 Straight Cylinder Interface (F)

Drum Motor

- Easy setting of direction, speed, acceleration, and deceleration
- Standard equipped with an assistant−type intelligent LCD keyboard
- Comprehensive protection functions including short circuit, phase loss, overload, overheat, etc.
- Detachable LCD keyboard for flexible and convenient external use
- Digital IO, bus communication (RS485, CANOPEN)
- And other control methods

Drive Technical Data

Rated Voltage	3X380VAC 50−60Hz
Rated Power	2.2kW
Rated Current	5.6A
Noise Level	40dB

Drive Application Environment

Operating Temperature	−15~55℃
Relative Humidity	5~95%RH (non−condensation)
Vibration	Maximum 1mm (0.04in.) (5−13.2Hz), Maximum 7m/s2 (23ft/s2) (13.2−100Hz) sinusoidal
Altitude	0−2000m (for TN, TT, IT grounding systems)
Installation Method	Thread Fixed Installation

Dimensions

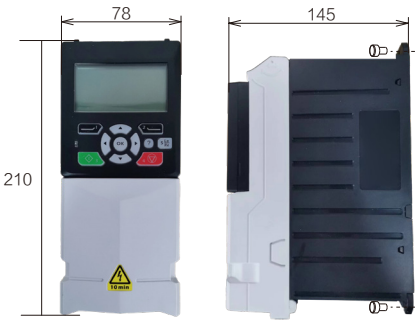

Electrical Mounting Board Opening Dimensions

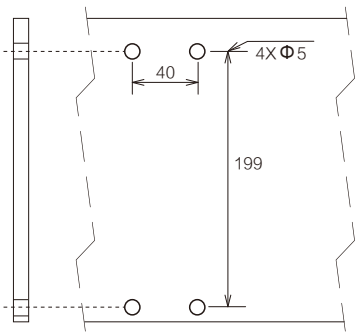

Drive Installation Example

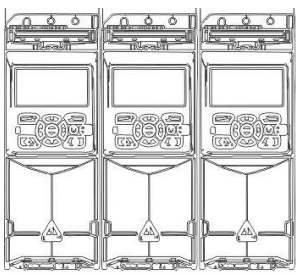

For optimal heat dissipation, side by side installation is preferred.

Product Model Example

DMC	-	A	-	C22	-	N	CA
①		②		③ ④		⑤	⑥

① Basic Model:DMC

② Model Code: **A**： Standard Type

③ Voltage Level: **C**： 3X380VAC 50Hz

④ Rated Power: **22**： 2.2kW

⑤ Braking Resistor: **N**： None

⑥ Bus Configuration: **CA**： CANOPEN **RS**： RS485

Examples

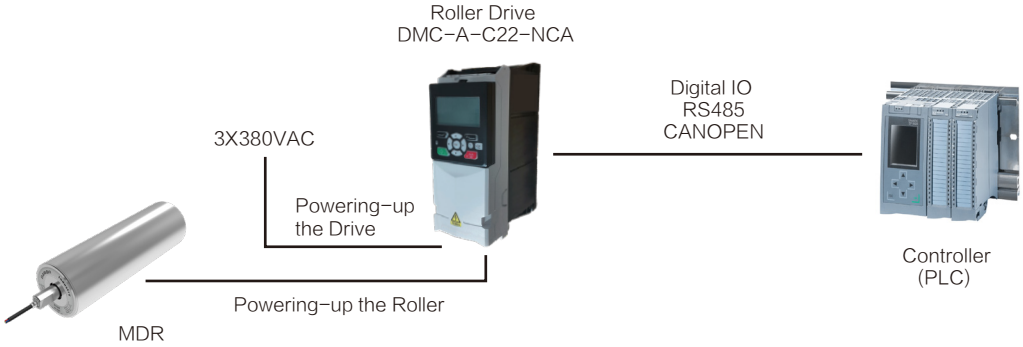
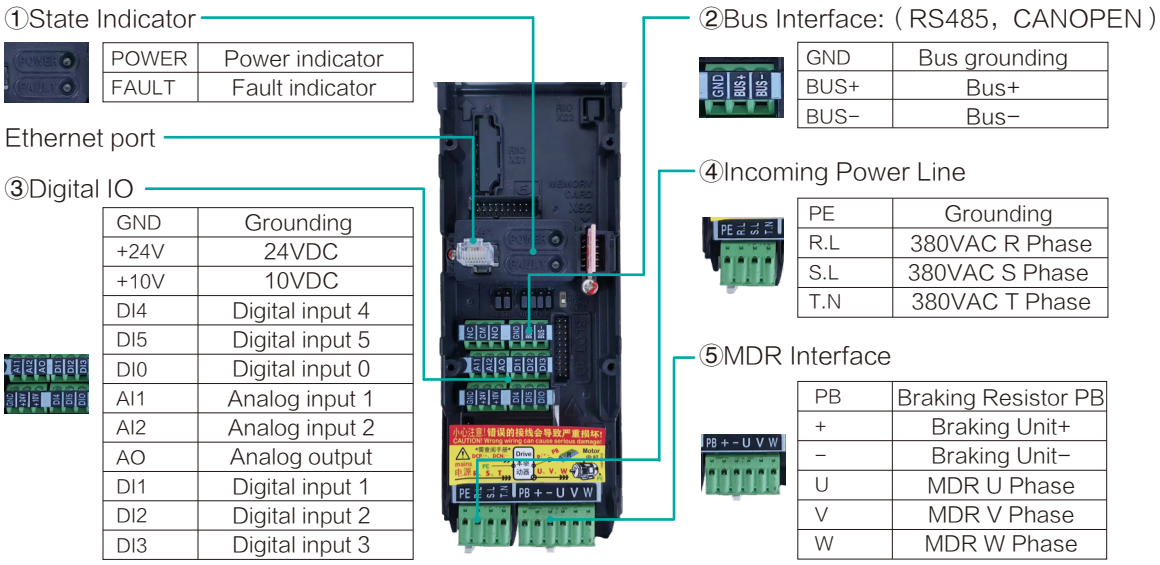
Wiring Instructions